EXE460SET# PONC.EXC 460W +ACC

4935357628 - EXE460 - 4000357629

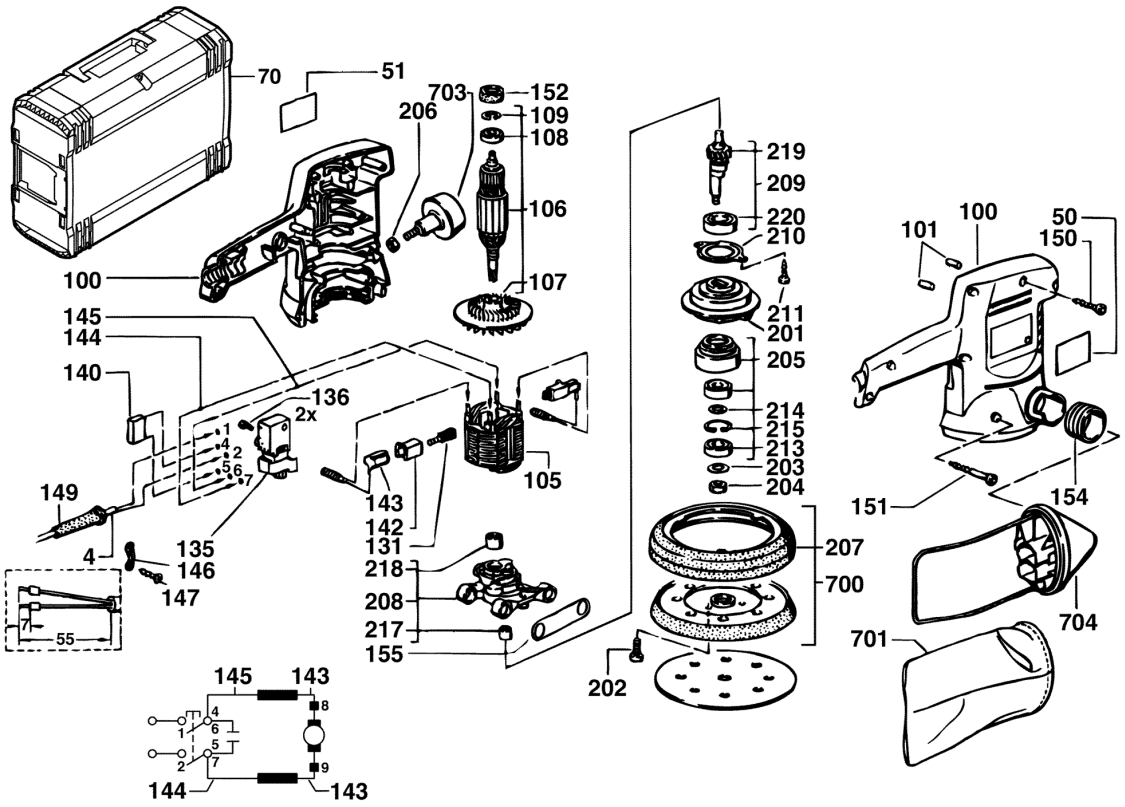
70
51
703
152
109
108
206
106
107
100
145
144
140
136
2x
1
4
2
5
6
7
149
4
135
146
147
7
55
143
142
131
218
208
217
155
105
219
209
220
210
211
201
205
214
215
213
203
204
207
700
202
101
100
50
150
151
154
704
701
145
143
8
4
1
6
5
2
7
9
144
143

Position	Quantity	Description	Part number	EAN
0004 1	1	CABLE D"ALIMENTATI.	4931622543	4002395698318
0050 2	1	PLAQUE SIGNALETIQUE	Item discontinued(4931357635)	
0051 3	1	PLAQUE DE TYPE	Item discontinued(4931355135)	
0070 4	1	COFFRET D.TRANSPORT	Item discontinued(4931381029)	
0100 5	1	CARTER MOTEUR	Item discontinued(4931329659)	
0101 6	2	MANCHE	Item discontinued(4931244948)	
0105 7	1	CHAMP ELECTRIQUE	4931426183	4002395834822
0106 8	1	INDUIT	Item discontinued(4931329663)	
0107 9	1	VENTILATEUR	Item discontinued(4931329667)	
0108 10	1	ROULEMENT A BILLES	4931902888	4002395706372
0109 11	1	RONDELLE	4931621834	4002395696185
0131 12	1	SET DE CHARBONS	4931361733	4002395659111
0135 13	1	INTERRUPTEUR	Item discontinued(4931334796)	
0136 14	2	VIS	4931621772	4002395695973
0140 15	1	CONDENSATEUR	4931311062	4002395594818
0142 16	2	PORTE-BALAIS	4931271678	4058546466411
0143 17	2	PORTE-BALAIS	Item discontinued(4931622391)	
0144 18	1	CABLE	4931622371	4002395697625
0145 19	1	CABLE	4931253700	4002395586172
0146 20	1	BRIDE	4931256500	4002395586547
0147 21	2	VIS	4931624538	4002395760039
0149 22	1	GAINE DE CABLE	4931206687	4002395583379
0150 23	8	VIS	4931618253	4002395694945
0151 24	2	VIS	4931622765	4002395699094
0152 25	1	DOUILLE EN CAOUTCH.	4931329779	4002395611003
0154 26	1	GARNITURE	Item discontinued(4931308594)	
0155 27	2	COLLIER	Item discontinued(4931345482)	
0201 28	1	CONTRE POIDS	Item discontinued(4931329670)	
0202 29	3	VIS	Item discontinued(4931621525)	
0203 30	1	DISQUE	4931621679	4002395695799
0204 31	1	ECROU	Item discontinued(4931622873)	
0205 32	1	MOYEU	4931329717	4002395610921
0206 33	1	ECROU	Item discontinued(4931615993)	
0207 34	1	MANCHON	4931329695	4002395610907
0208 35	1	CARTER	Item discontinued(4931329669)	
0209 36	1	BROCHE	Item discontinued(4931329716)	
0210 37	1	CHAPEAU D.ROULEMENT	Item discontinued(4931329677)	
0211 38	2	VIS	4931317532	4002395600175
0213 39	2	ROULEMENT A BILLES	4931368037	4002395670642
0214 40	1	DISQUE 4	4931622841	4002395699452
0215 41	1	CIRCLIP	4931616614	4002395694624
0217 42	1	ROUL. A AIGUILLES	Item discontinued(4931940282)	
0218 43	1	DOUILLE	Item discontinued(4931622516)	
0219 44	1	BROCHE	Item discontinued(4931329672)	
0220 45	1	ROULEMENT A BILLES	Item discontinued(4931623202)	
0703 46	1	POIGNEE ROS150 (x1)	Item discontinued(4931311721)	
0704 47	1	SUPPORT SAC 313096 (x1)	Item discontinued(4931329719)	
0700 48	1	Disque 150MM ROS150 (x1)	4932357591	4002395343317